Expand DisplayTunnel
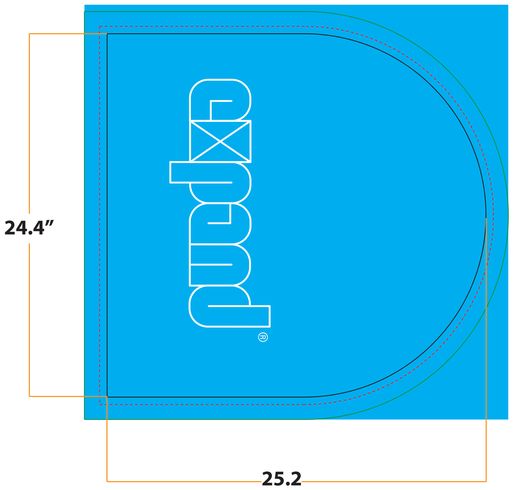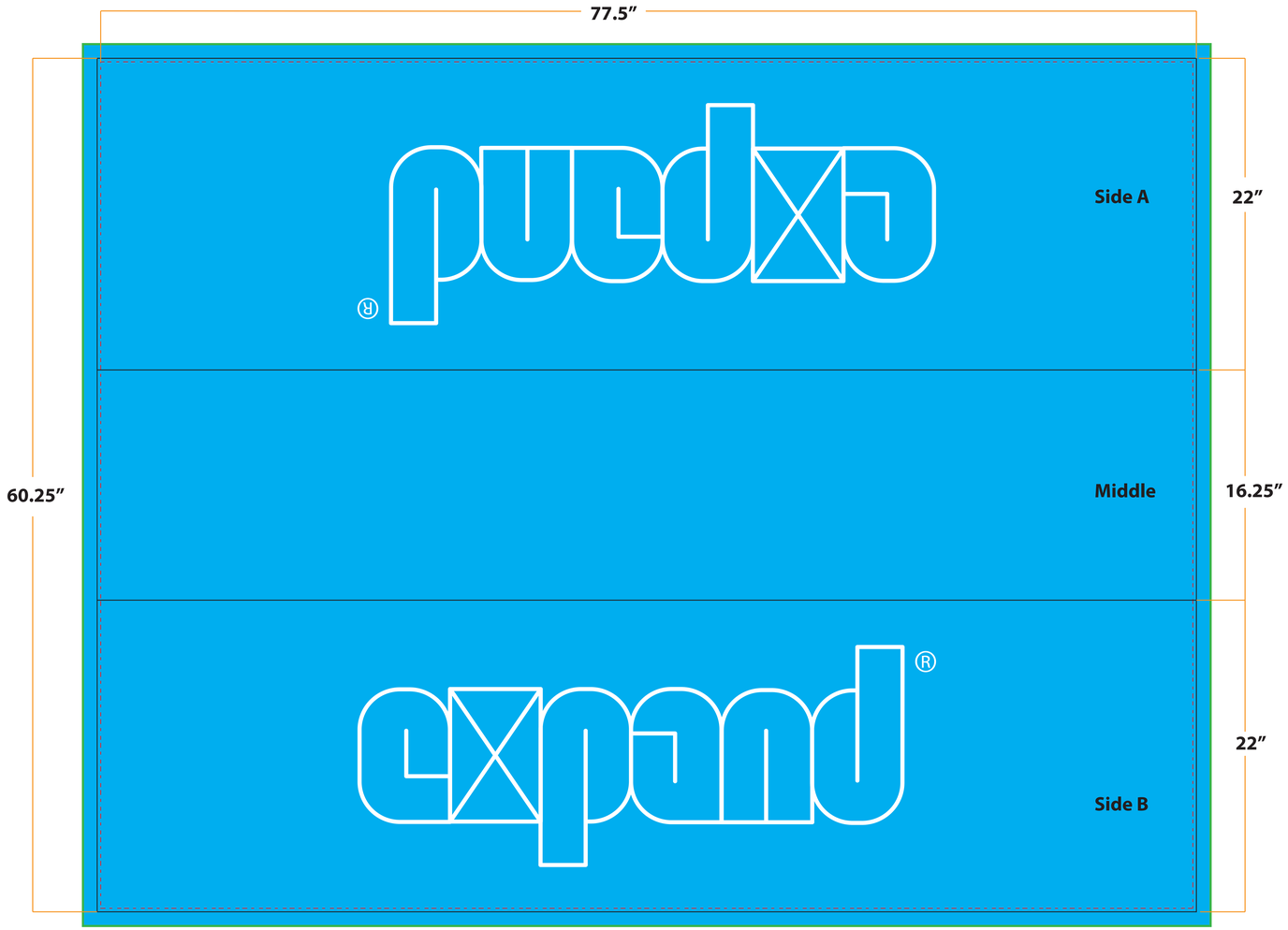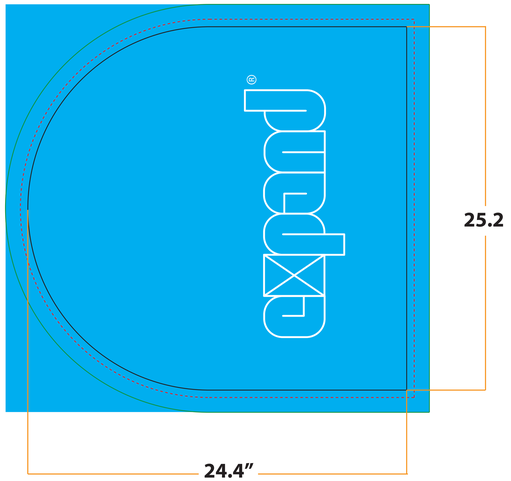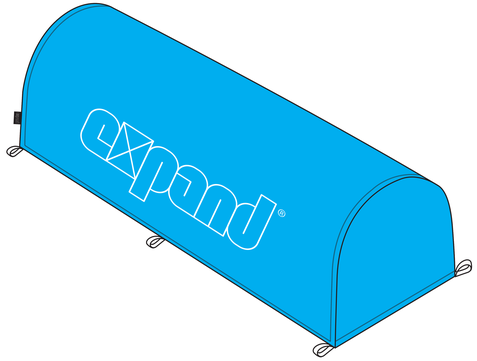
Bring Artwork to the Green Bleed Line